413-13 - PARKING AID --- JLR 20 94 10_2E - F-TYPE iEWD (RHD) (2b) K03163 > K10867 --- (2 / 2)
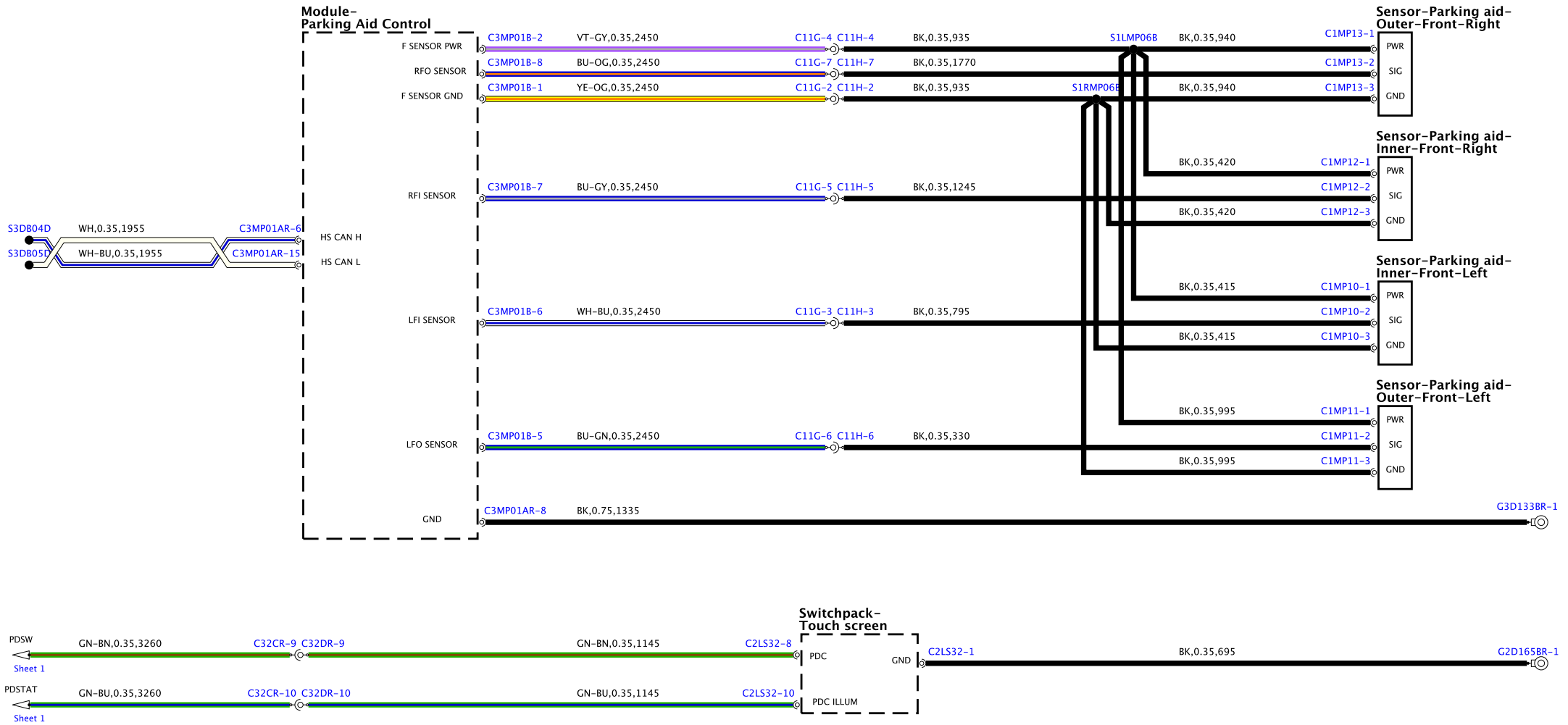
EX53-70481-B-A-02-02-Service (X152-13MY-J081P90)