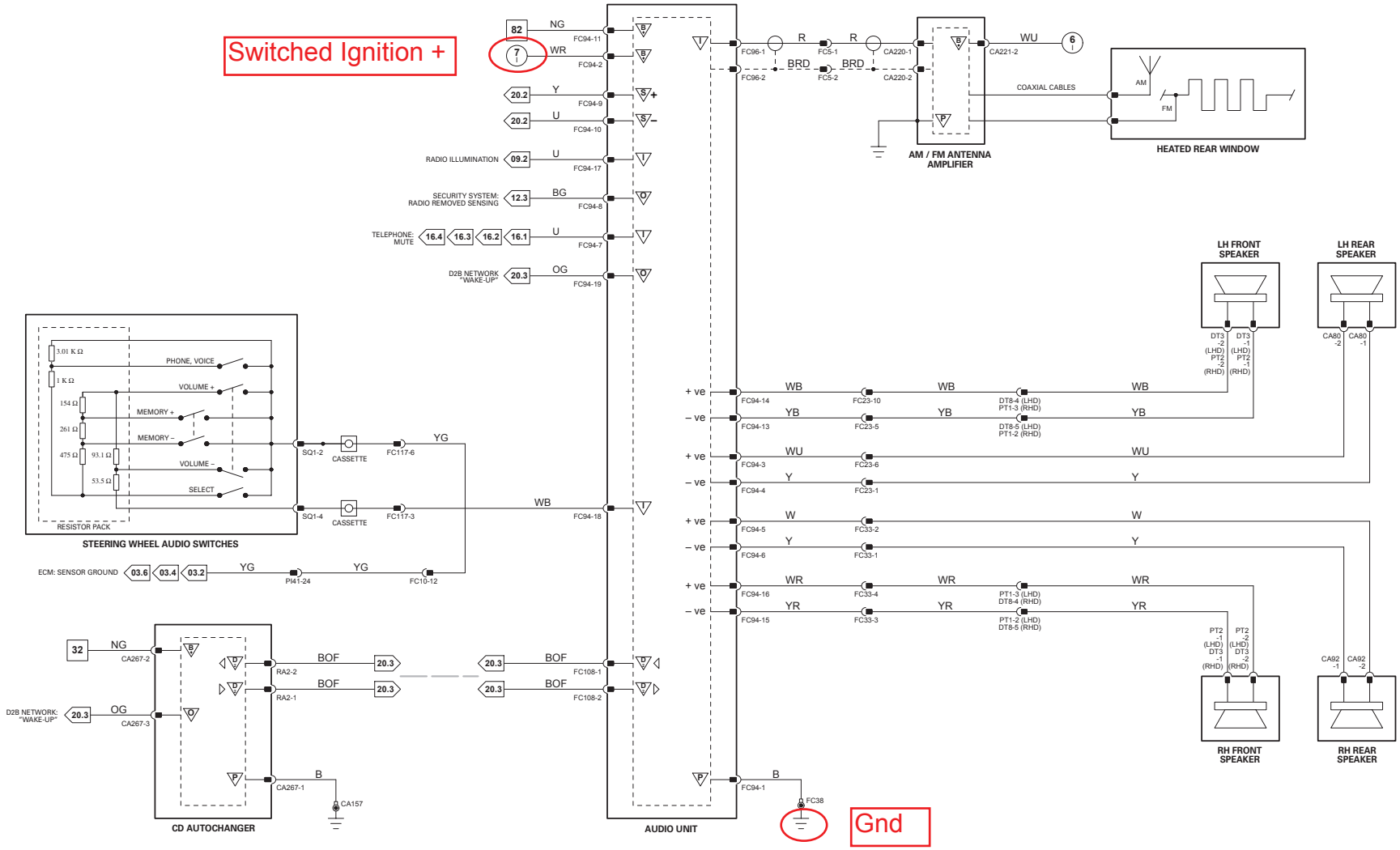

1 → 3 Fig. 01.1	4 → 76 Fig. 01.2	77 → 92 Fig. 01.3	1 → 14 Fig. 01.4	15 → 45 Fig. 01.5	46 → 80 Fig. 01.6	81 → 118 Fig. 01.7	I Input O Output	B Battery Voltage P Power Ground	+ Sensor/Signal Supply V – Sensor/Signal Ground	C CAN S SCP	D D2B Network D Serial and Encoded Data

VARIANT: Standard ICE Vehicles
VIN RANGE: All
DATE OF ISSUE: June 2002