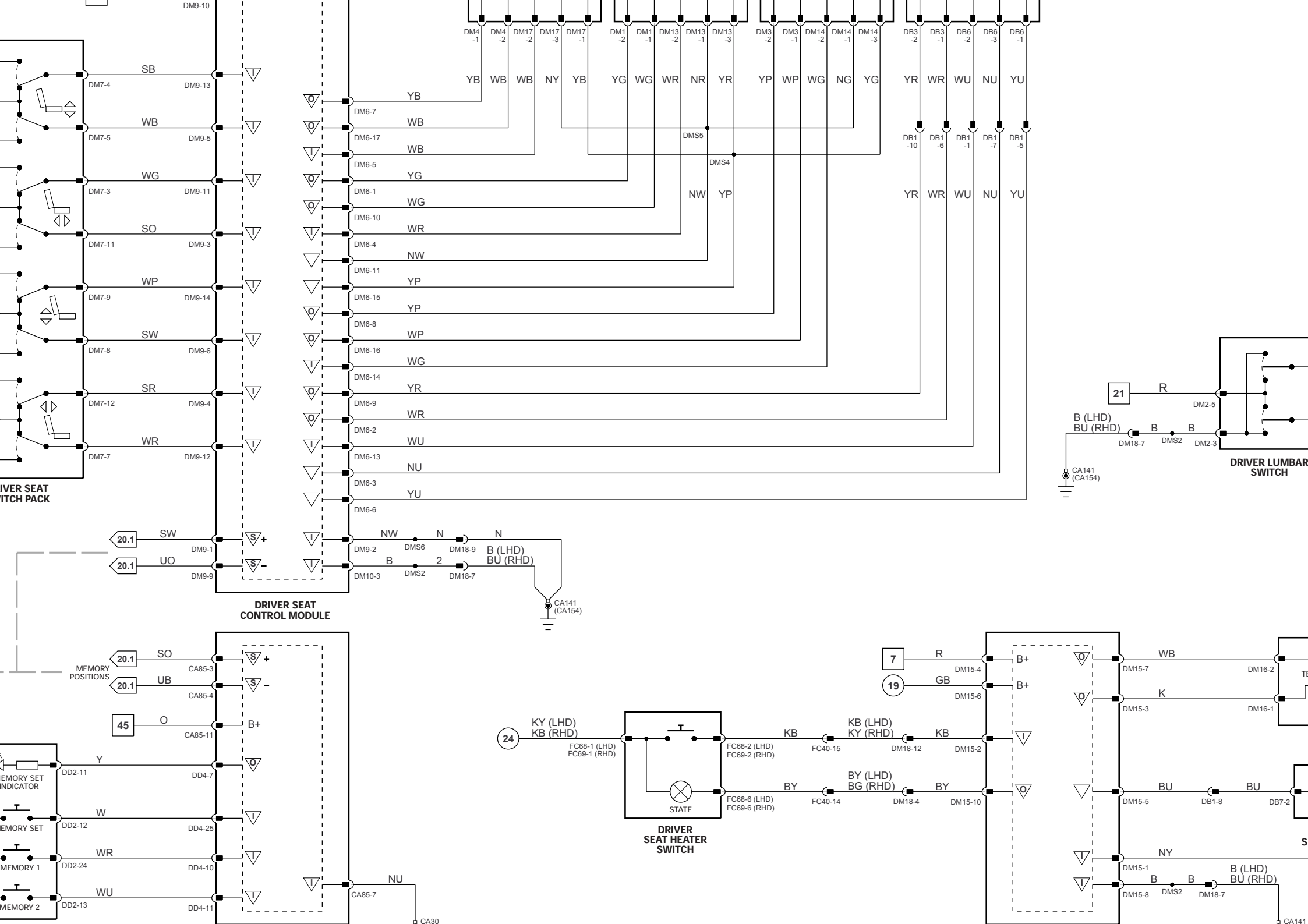
DM9-10
DM4-1
DM4-2
DM17-2
DM17-3
DM17-1
DM1-2
DM1-1
DM13-2
DM13-1
DM13-3
DM3-2
DM3-1
DM14-2
DM14-1
DM14-3
DB3-2
DB3-1
DB6-2
DB6-3
DB6-1
YB WB WB NY YB YG WG WR NR YR YP WP WG NG YG YR WR WU NU YU
DB1-10
DB1-6
DB1-1
DB1-7
DB1-5
DMS5
DMS4
NW YP
YR WR WU NU YU
SB
DM7-4
DM9-13
WB
DM7-5
DM9-5
WG
DM7-3
DM9-11
SO
DM7-11
DM9-3
WP
DM7-9
DM9-14
SW
DM7-8
DM9-6
SR
DM7-12
DM9-4
WR
DM7-7
DM9-12
DRIVER SEAT SWITCH PACK
DM6-7
DM6-17
DM6-5
DM6-1
DM6-10
DM6-4
DM6-11
DM6-15
DM6-8
DM6-16
DM6-14
DM6-9
DM6-2
DM6-13
DM6-3
DM6-6
YB
WB
WB
YG
WG
WR
NW
YP
YP
WP
WG
YR
WR
WU
NU
YU
21
R
DM2-5
B (LHD)
BU (RHD)
B
B
DM18-7
DMS2
DM2-3
CA141
(CA154)
DRIVER LUMBAR SWITCH
20.1
SW
DM9-1
20.1
UO
DM9-9
NW
N
N
DM9-2
DMS6
DM18-9
B (LHD)
BU (RHD)
B
2
DM10-3
DMS2
DM18-7
CA141
(CA154)
DRIVER SEAT CONTROL MODULE
MEMORY POSITIONS
20.1
SO
CA85-3
20.1
UB
CA85-4
45
O
CA85-11
B+
MEMORY SET INDICATOR
Y
DD2-11
DD4-7
MEMORY SET
W
DD2-12
DD4-25
MEMORY 1
WR
DD2-24
DD4-10
MEMORY 2
WU
DD2-13
DD4-11
NU
CA85-7
CA30
24
KY (LHD)
KB (RHD)
FC68-1 (LHD)
FC69-1 (RHD)
STATE
FC68-2 (LHD)
FC69-2 (RHD)
KB
FC40-15
KB (LHD)
KY (RHD)
DM18-12
KB
DM15-2
FC68-6 (LHD)
FC69-6 (RHD)
BY
FC40-14
BY (LHD)
BG (RHD)
DM18-4
BY
DM15-10
DRIVER SEAT HEATER SWITCH
7
R
DM15-4
19
GB
DM15-6
B+
B+
WB
DM15-7
DM16-2
K
DM15-3
DM16-1
BU
DM15-5
DB1-8
BU
DB7-2
NY
DM15-1
B
B
B (LHD)
BU (RHD)
DM15-8
DMS2
DM18-7
CA141

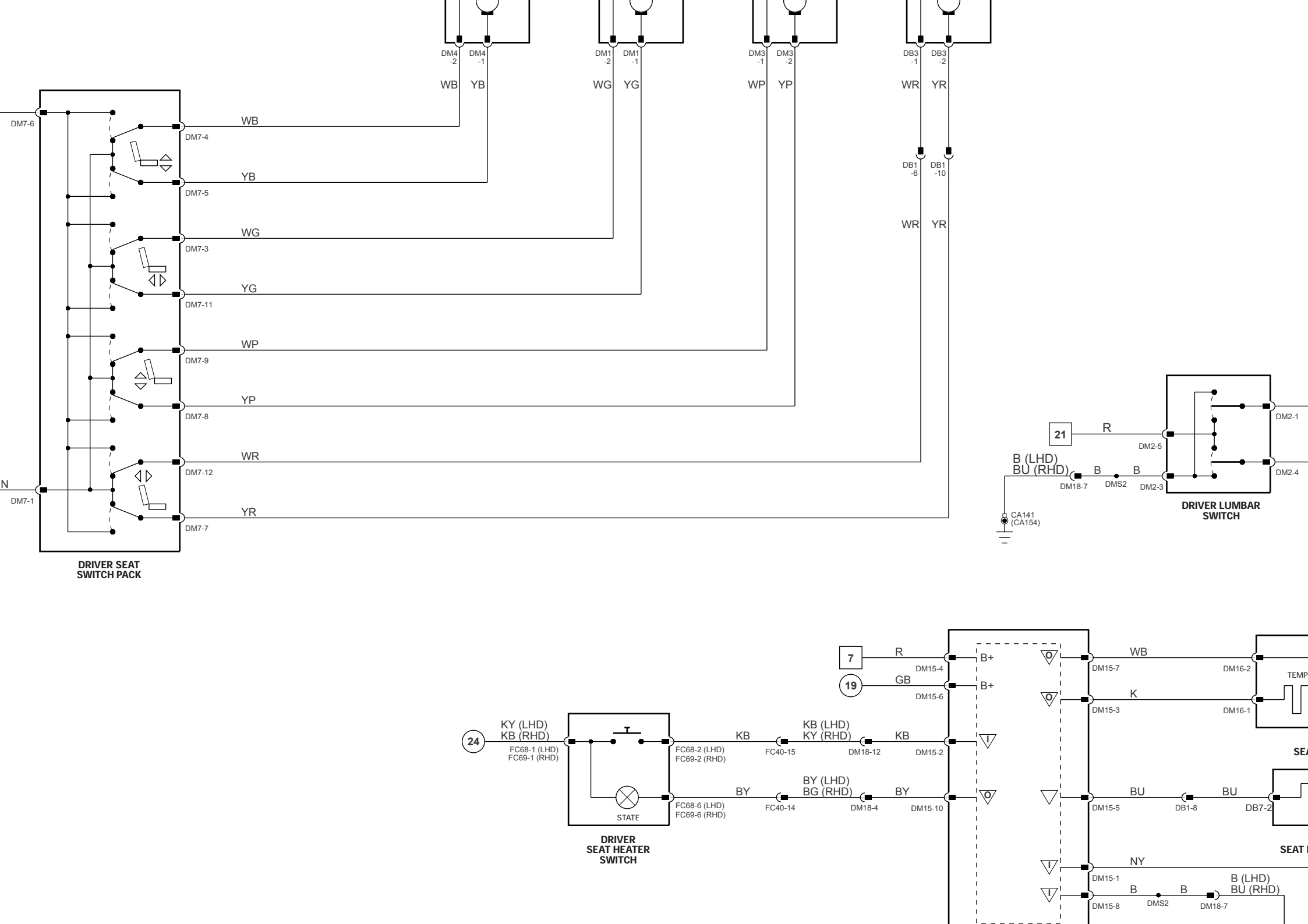
DM4 -2
DM4 -1
DM1 -2
DM1 -1
DM3 -1
DM3 -2
DB3 -1
DB3 -2
WB
YB
WG
YG
WP
YP
WR
YR
DB1 -6
DB1 -10
DM7-6
DM7-4
DM7-5
DM7-3
DM7-11
DM7-9
DM7-8
DM7-12
DM7-1
DM7-7
DRIVER SEAT SWITCH PACK
21
R
DM2-5
DM2-1
DM2-4
B (LHD)
BU (RHD)
B
DM18-7
DMS2
DM2-3
CA141
(CA154)
DRIVER LUMBAR SWITCH
7
19
24
DM15-4
DM15-6
B+
GB
KY (LHD)
KB (RHD)
FC68-1 (LHD)
FC69-1 (RHD)
STATE
FC68-2 (LHD)
FC69-2 (RHD)
KB
FC40-15
KB (LHD)
KY (RHD)
DM18-12
DM15-2
FC68-6 (LHD)
FC69-6 (RHD)
BY
FC40-14
BY (LHD)
BG (RHD)
DM18-4
DM15-10
DRIVER SEAT HEATER SWITCH
DM15-7
DM16-2
DM15-3
DM16-1
DM15-5
DB1-8
DB7-2
DM15-1
DM15-8
NY
DM18-7
TEMP

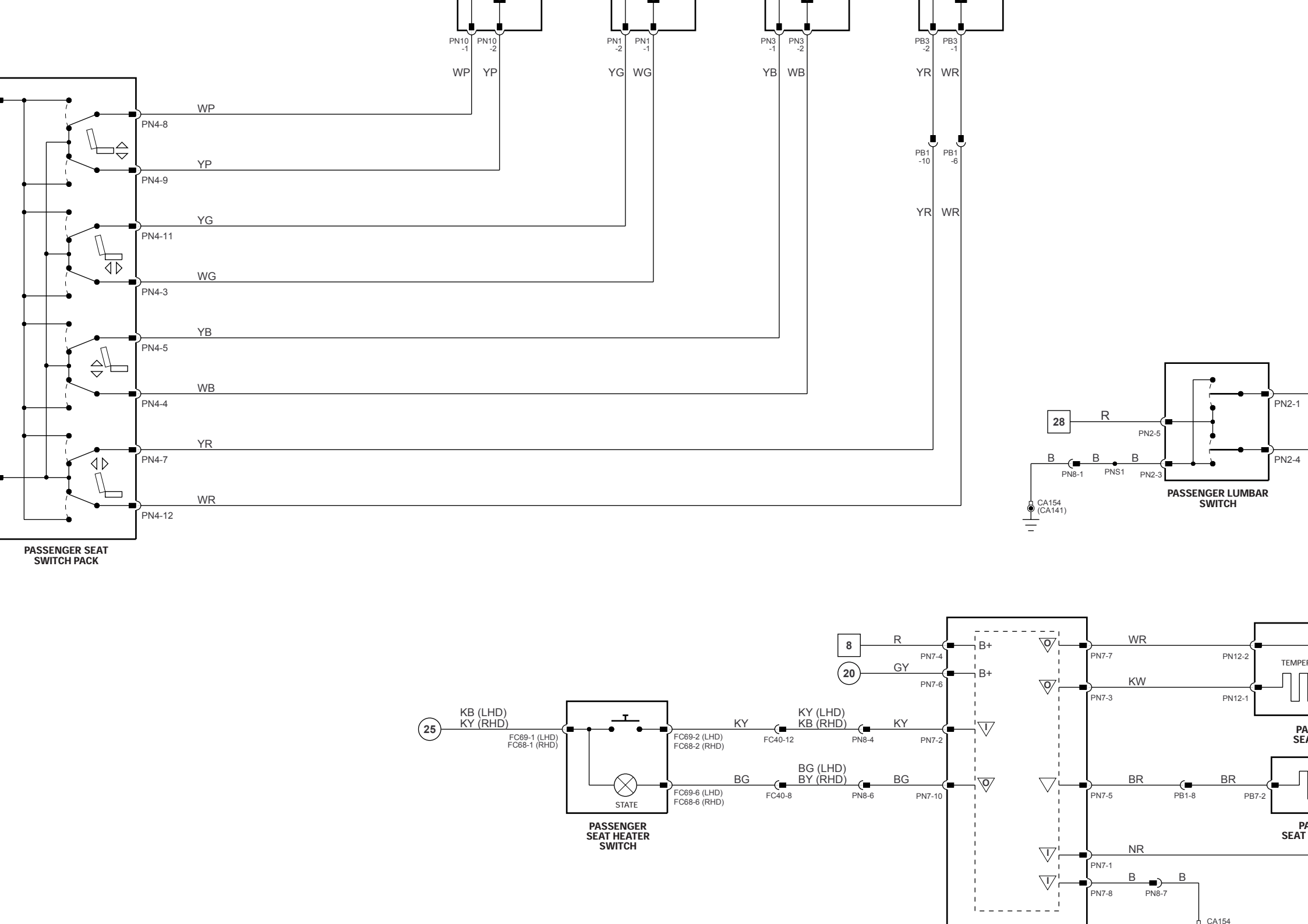
PN10 -1
PN10 -2
PN1 -2
PN1 -1
PN3 -1
PN3 -2
PB3 -2
PB3 -1
WP
YP
YG
WG
YB
WB
YR
WR
PB1 -10
PB1 -6
PN4-8
PN4-9
PN4-11
PN4-3
PN4-5
PN4-4
PN4-7
PN4-12
PASSENGER SEAT SWITCH PACK
28
R
PN2-5
PN2-1
PN2-4
B
PN8-1
PNS1
PN2-3
CA154 (CA141)
PASSENGER LUMBAR SWITCH
8
20
25
GY
PN7-4
PN7-6
B+
KB (LHD) KY (RHD)
FC69-1 (LHD) FC68-1 (RHD)
FC69-2 (LHD) FC68-2 (RHD)
KY
KY (LHD) KB (RHD)
FC40-12
PN8-4
PN7-2
FC69-6 (LHD) FC68-6 (RHD)
BG
BG (LHD) BY (RHD)
FC40-8
PN8-6
PN7-10
STATE
PASSENGER SEAT HEATER SWITCH
PN7-7
PN7-3
PN7-5
PN7-1
PN7-8
PN8-7
PN12-2
PN12-1
PB1-8
PB7-2
NR
CA154