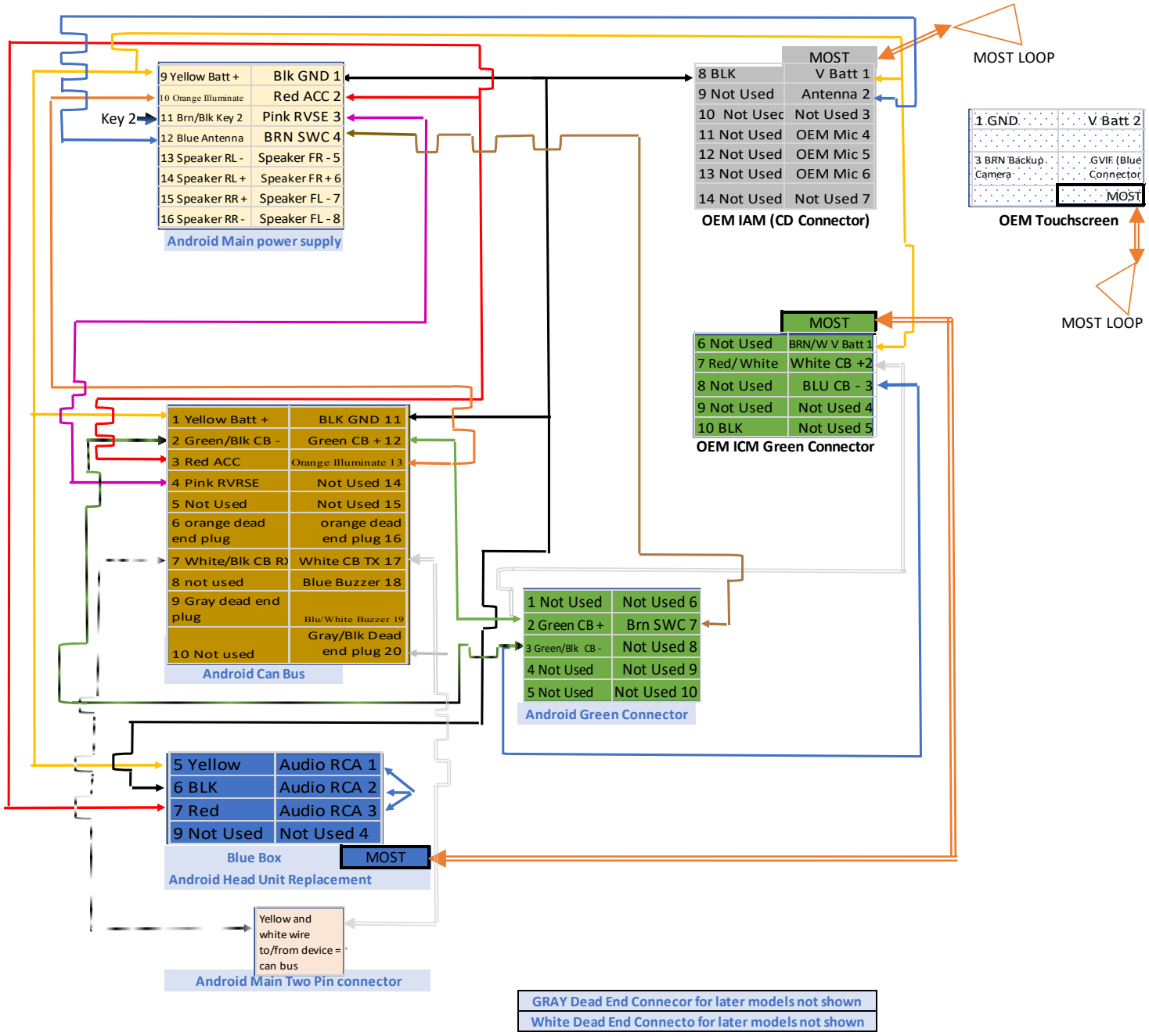
9 Yellow Batt +
Blk GND 1
10 Orange Illuminate
Red ACC 2
Key 2
11 Brn/Blk Key 2
Pink RVSE 3
12 Blue Antenna
BRN SWC 4
13 Speaker RL -
Speaker FR - 5
14 Speaker RL +
Speaker FR + 6
15 Speaker RR +
Speaker FL - 7
16 Speaker RR -
Speaker FL - 8
Android Main power supply
MOST
8 BLK
V Batt 1
9 Not Used
Antenna 2
10 Not Usec
Not Used 3
11 Not Used
OEM Mic 4
12 Not Used
OEM Mic 5
13 Not Used
OEM Mic 6
14 Not Used
Not Used 7
OEM IAM (CD Connector)
MOST LOOP
1 GND
V Batt 2
3 BRN Backup Camera
GVIF (Blue Connector
MOST
OEM Touchscreen
MOST LOOP
MOST
6 Not Used
BRN/W V Batt 1
7 Red/ White
White CB +2
8 Not Used
BLU CB - 3
9 Not Used
Not Used 4
10 BLK
Not Used 5
OEM ICM Green Connector
1 Yellow Batt +
BLK GND 11
2 Green/Blk CB -
Green CB + 12
3 Red ACC
Orange Illuminate 13
4 Pink RVRSE
Not Used 14
5 Not Used
Not Used 15
6 orange dead end plug
orange dead end plug 16
7 White/Blk CB RX
White CB TX 17
8 not used
Blue Buzzer 18
9 Gray dead end plug
Blu/White Buzzer 19
10 Not used
Gray/Blk Dead end plug 20
Android Can Bus
1 Not Used
Not Used 6
2 Green CB +
Brn SWC 7
3 Green/Blk CB -
Not Used 8
4 Not Used
Not Used 9
5 Not Used
Not Used 10
Android Green Connector
5 Yellow
Audio RCA 1
6 BLK
Audio RCA 2
7 Red
Audio RCA 3
9 Not Used
Not Used 4
Blue Box
MOST
Android Head Unit Replacement
Yellow and white wire to/from device = can bus
Android Main Two Pin connector
GRAY Dead End Connecor for later models not shown
White Dead End Connecto for later models not shown