CONTROL MODULE PIN OUT INFORMATION

BODY PROCESSOR MODULE

▽	Pin	Description	Active	Inactive
O	FC1-12	RH TRUNK LAMP	GROUND	B+
O	FC1-15	LH TRUNK LAMP	GROUND	B+
O	FC1-24	INTERIOR AND COURTESY LAMPS	GROUND	B+
O	FC1-30	PUDDLE LAMP RELAY	GROUND	B+
I	FC2-2	INTERIOR LAMPS ON	GROUND	B+
I	FC2-29	CONSOLE INTERIOR LAMP SWITCH	GROUND	B+
I	FC2-30	PASSENGER DOOR AJAR	GROUND	B+
I	FC2-32	TRUNK AJAR	GROUND	B+
I	FC2-33	DRIVER DOOR AJAR	GROUND	B+
I	FC2-41	INTERIOR LAMP EXTINGUISH DURING CRANK	GROUND	B+
I	FC2-48	KEY IN IGNITION SWITCH	GROUND	B+

The following symbols are used to represent values for Control Module Pin Out data:

I	**Input**	**B+**	**Battery voltage**
O	**Output**	**V**	**Voltage (DC)**
SG	**Signal Ground**	**Hz**	**Frequency**
D	**Serial and encoded communications**	**KHz**	**Frequency x 1000**
		MS	**Milliseconds**
		MV	**Millivolts**

CAUTION: The information on this data page is furnished to aid the user in understanding circuit operation. THIS INFORMATION SHOULD BE USED FOR REFERENCE ONLY.

NOTE: The values listed are approximately those that can be expected at the control module connector pins with all circuit connections made and all components connected and fitted. "Active" means a load is applied or a switch is ON; "Inactive" means a load is not applied or a switch is OFF.

Fig. 10.1

COMPONENTS

Component	Connector / Type / Color	Location / Access
BODY PROCESSOR MODULE	FC1 / 48-WAY PCB SIGNAL / YELLOW FC2 / 48-WAY PCB SIGNAL / BLACK FC3 / 6-WAY PCB SIGNAL / BLACK	PASSENGER'S UNDERSCUTTLE
DOOR SWITCH PACK – DRIVER	DD1 / 12-WAY MULTILOCK 47 / WHITE DD2 / 22-WAY MULTILOCK 47 / WHITE	ARM REST / TOP ROLL
DOOR SWITCH PACK – LH REAR	RD1-L / 12-WAY MULTILOCK 070 / WHITE	DOOR CASING
DOOR SWITCH PACK – PASSENGER	PD1 / 26-WAY MULTILOCK 47 / SLATE	ARM REST / TOP ROLL
DOOR SWITCH PACK – RH REAR	RD1-R / 12-WAY MULTILOCK 070 / WHITE	DOOR CASING
DOOR SWITCH – DRIVER	DD3 / 13-WAY ECONOSEAL III LC / BLACK	DOOR CASING
DOOR SWITCH – LH REAR	RD3-L / 6-WAY ECONOSEAL III LC / BLACK	DOOR CASING
DOOR SWITCH – PASSENGER	PD3 / 13-WAY ECONOSEAL III LC / BLACK	DOOR CASING
DOOR SWITCH – RH REAR	RD3-R / 6-WAY ECONOSEAL III LC / BLACK	DOOR CASING
E-POST LAMP – LH	CA89 / 4-WAY MULTILOCK 040 / BLACK	'E' POST LAMP
E-POST LAMP – RH	CA90 / 4-WAY MULTILOCK 040 / BLACK	'E' POST LAMP
GLOVE BOX LAMP	GI1 / LUCAR / NATURAL GI2 / LUCAR / NATURAL	GLOVE BOX GLOVE BOX
IGNITION SWITCH	FC54 (FLY LEAD) / 8-WAY MULTILOCK 070 / WHITE	STEERING COLUMN / COVER
INTERIOR / MAP LAMPS CONSOLE	CA83 / 8-WAY MULTILOCK 040 / BLACK	ROOF CONSOLE
PUDDLE LAMP – DRIVER DOOR	DD14 / 2-WAY JUNIOR TIMER / BLACK	DOOR CASING
PUDDLE LAMP – LH REAR DOOR	RD7L / LUCAR / WHITE RD8L / LUCAR / WHITE	DOOR CASING
PUDDLE LAMP – PASSENGER DOOR	PD14 / 2-WAY JUNIOR TIMER / BLACK	DOOR CASING
PUDDLE LAMP – RH REAR DOOR	RD7R / LUCAR / WHITE RD8R / LUCAR / WHITE	DOOR CASING
SUNVISOR LAMP – LH	CA69 / 2-WAY MULTILOCK 040 / BLACK	LH SUNVISOR
SUNVISOR LAMP – RH	CA70 / 2-WAY MULTILOCK 040 / BLACK	RH SUNVISOR
TRUNK LAMP – LH	BT46 / 2-WAY JUNIOR TIMER / BLACK	TRUNK, LH SIDE, REAR
TRUNK LAMP – RH	BT47 / 2-WAY JUNIOR TIMER / BLACK	TRUNK ,RH SIDE, REAR
TRUNK SWITCH	BT15 / 2-WAY FORD DIAGNOSTIC / BLACK	TRUNK LID / TRUNK LID TRIM

RELAYS

Relay	Color / Stripe	Connector / Color	Location / Access
PUDDLE LAMP RELAY – DRIVER	BROWN	CA53 / BROWN	LH HEELBOARD

HARNESS-TO-HARNESS CONNECTORS

Connector	Type / Color	Location / Access
BT4	THROUGH-PANEL (48 MICRO / 6) / BLACK	ABOVE FUEL TANK / FUEL TANK TRIM
CA8	20-WAY MULTILOCK 040 / GREEN	DRIVER'S 'A' POST / 'A' POST TRIM
CA9	20-WAY MULTILOCK 040 / BLACK	DRIVER'S 'A' POST / 'A' POST TRIM
CA10	8-WAY MULTILOCK 070 / WHITE	DRIVER'S 'A' POST / 'A' POST TRIM
CA11	20-WAY MULTILOCK 040 / WHITE	PASSENGER'S UNDERSCUTTLE / ECM
CA12	14-WAY MULTILOCK 070 / WHITE	PASSENGER'S UNDERSCUTTLE / ECM
CA13	6-WAY MULTILOCK 070 / WHITE	LH 'BC' POST / 'BC' POST PANEL
CA14	4-WAY MULTILOCK 070 / WHITE	LH 'BC' POST / 'BC' POST PANEL
CA15	6-WAY MULTILOCK 070 / WHITE	RH 'BC' POST / 'BC' POST PANEL
CA16	4-WAY MULTILOCK 070 / WHITE	RH 'BC' POST / 'BC' POST PANEL
CA79	4-WAY MULTILOCK 070 / WHITE	LH 'BC' POST / 'BC' POST PANEL
CA80	4-WAY MULTILOCK 070 / WHITE	RH 'BC' POST / 'BC' POST PANEL
CC3	20-WAY MULTILOCK 070 / SLATE	CENTER CONSOLE / CENTER CONSOLE GLOVE BOX
CC4	14-WAY MULTILOCK 070 / WHITE	CENTER CONSOLE / CENTER CONSOLE GLOVE BOX
CC5	20-WAY MULTILOCK 070 / WHITE	CENTER CONSOLE / CENTER CONSOLE GLOVE BOX
CC18	20-WAY MULTILOCK 070 / YELLOW	CENTER CONSOLE / CENTER CONSOLE GLOVE BOX
CC53	2-WAY MULTILOCK 040 / BLACK	PASSENGER'S UNDERSCUTTLE
FC5	THROUGH-PANEL (48 MICRO / 6) / BLACK	LH FASCIA END PANEL / OUTER AIR VENT
FC6	THROUGH-PANEL (48 MICRO / 6) / BLACK	RH FASCIA END PANEL / OUTER AIR VENT
FC7	THROUGH-PANEL (48 MICRO / 6) / BLACK	PASSENGER'S UNDERSCUTTLE
FC16	20-WAY MULTILOCK 040 / BLACK	PASSENGER'S UNDERSCUTTLE

GROUNDS

Ground	Location / Type	Ground	Location / Type
CAG30L	LH 'A' POST GROUND SCREW	CAG92L	RH HEELBOARD GROUND SCREW
CAG30R	LH 'A' POST GROUND SCREW	CAG93R	LH HEELBOARD GROUND SCREW
CAG31R	PARCEL SHELF GROUND SCREW	FCG15L	LH CONSOLE GROUND STUD
CAG33L	RH HEELBOARD GROUND SCREW	FCG26R	LH CONSOLE GROUND STUD

CONTROL MODULE PIN OUT INFORMATION (FOLD OUT PAGE)

←

REFER TO THE FRONT OF THE BOOK FOR ILLUSTRATIONS DETAILING THE LOCATION AND IDENTIFICATION OF COMPONENTS, RELAYS, CONNECTORS, HARNESSES, GROUNDS, VEHICLE CONTROL MODULES AND CONTROL MODULE PINS.

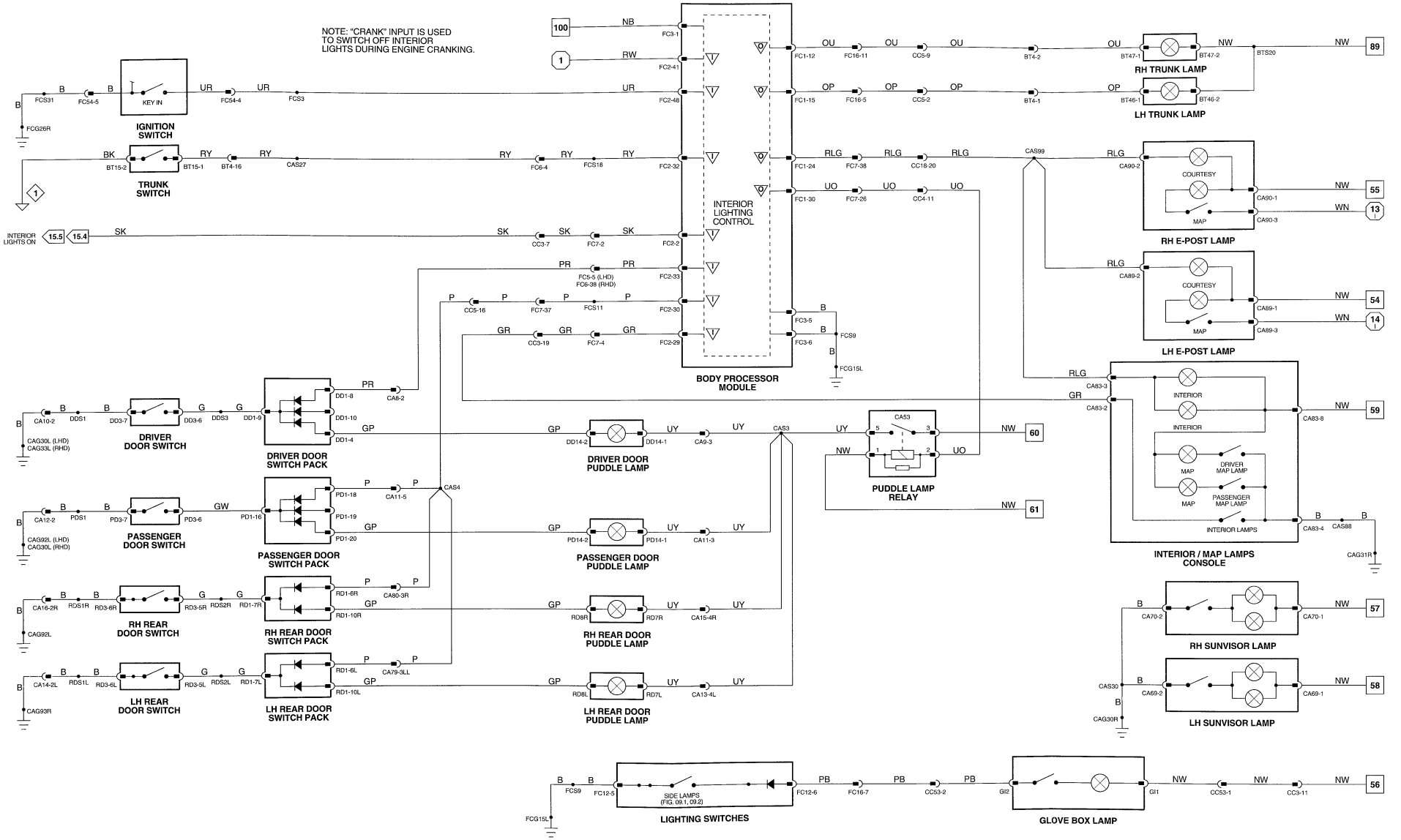

1 — 6 Fig. 01.1	7 — 66 Fig. 01.2	67 — 109 Fig. 01.3	I II Fig. 01.4	I II Fig. 02.1	Fig. 02.2	Input	Output	Serial and Encoded Communications	Signal Ground (SG)

VARIANT: All Vehicles
VIN RANGE: 787954 →
DATE OF ISSUE: JANUARY 1997