Radiator Cooling; Air Conditioning Compressor – AJ16

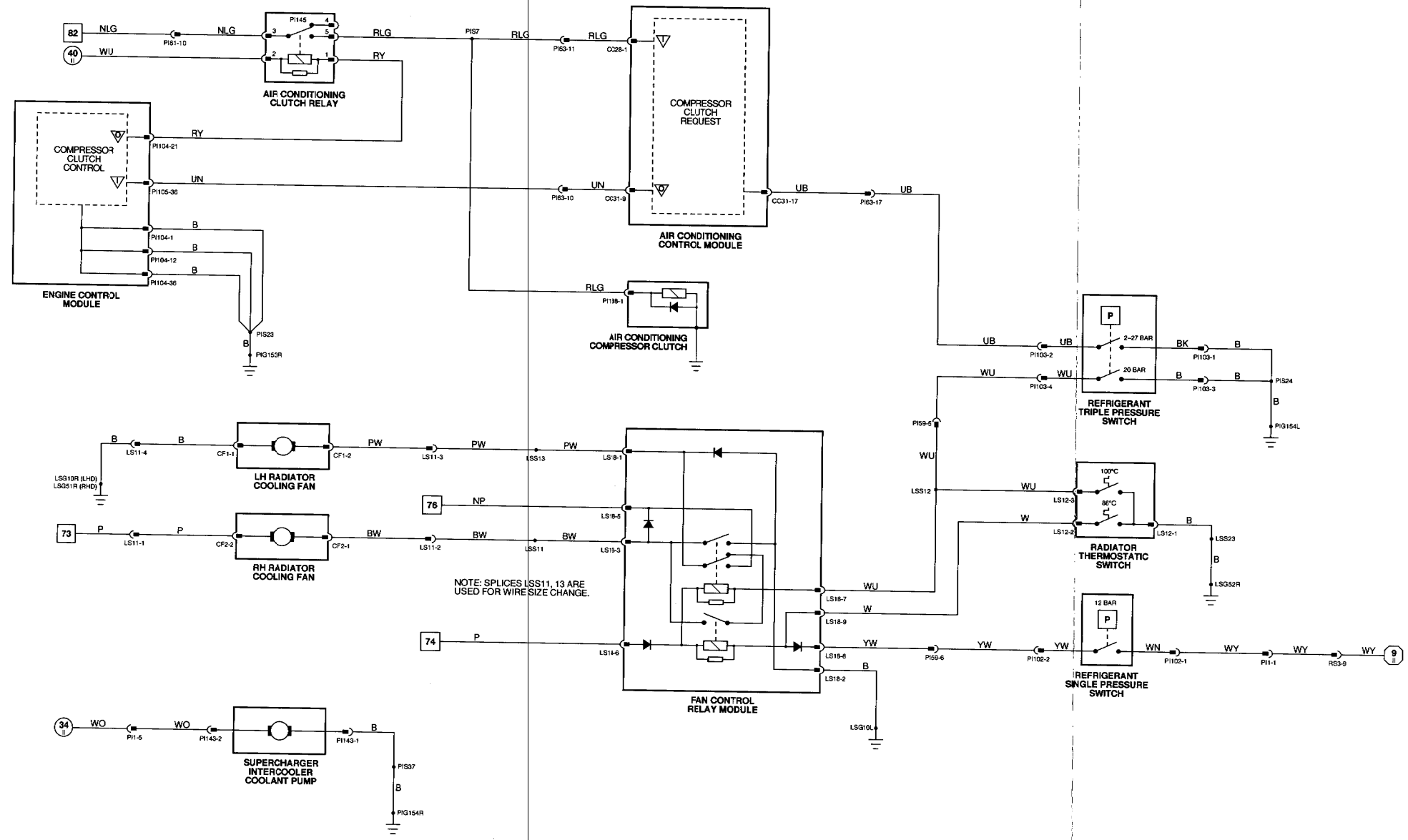

1 — 6 Fig. 01.1	7 — 66 Fig. 01.2	67 — 109 Fig. 01.3	I II Fig. 01.4	I II Fig. 02.1	Fig. 02.2	Input	Output	Serial and Encoded Communications	Signal Ground (SG)

VARIANT: AJ16 Vehicles
VIN RANGE: 746613 →
DATE OF ISSUE: NOVEMBER 1995