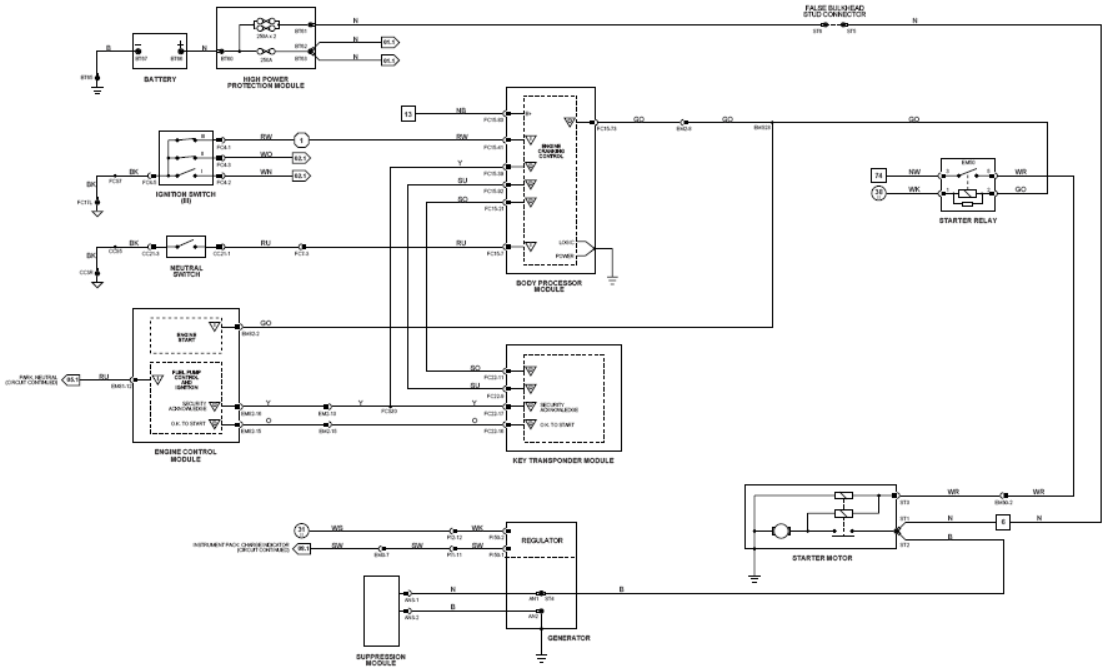

1 – 8 / 1 – 5 Fig. 01.1	7 – 48 Fig. 01.2 / 49 – 85 Fig. 01.3	1 – 12 Fig. 01.4 / 13 – 19 Fig. 01.5	1 – 19 Fig. 02.1	Input / Signal Ground (SG)	Output / CAN (Network)	Serial and Encoded Communications / SCP Network

VARIANT: AJ27e N/A Vehicles
VIN RANGE: 8C1934 →
DATE OF ISSUE: SEPTEMBER 1999