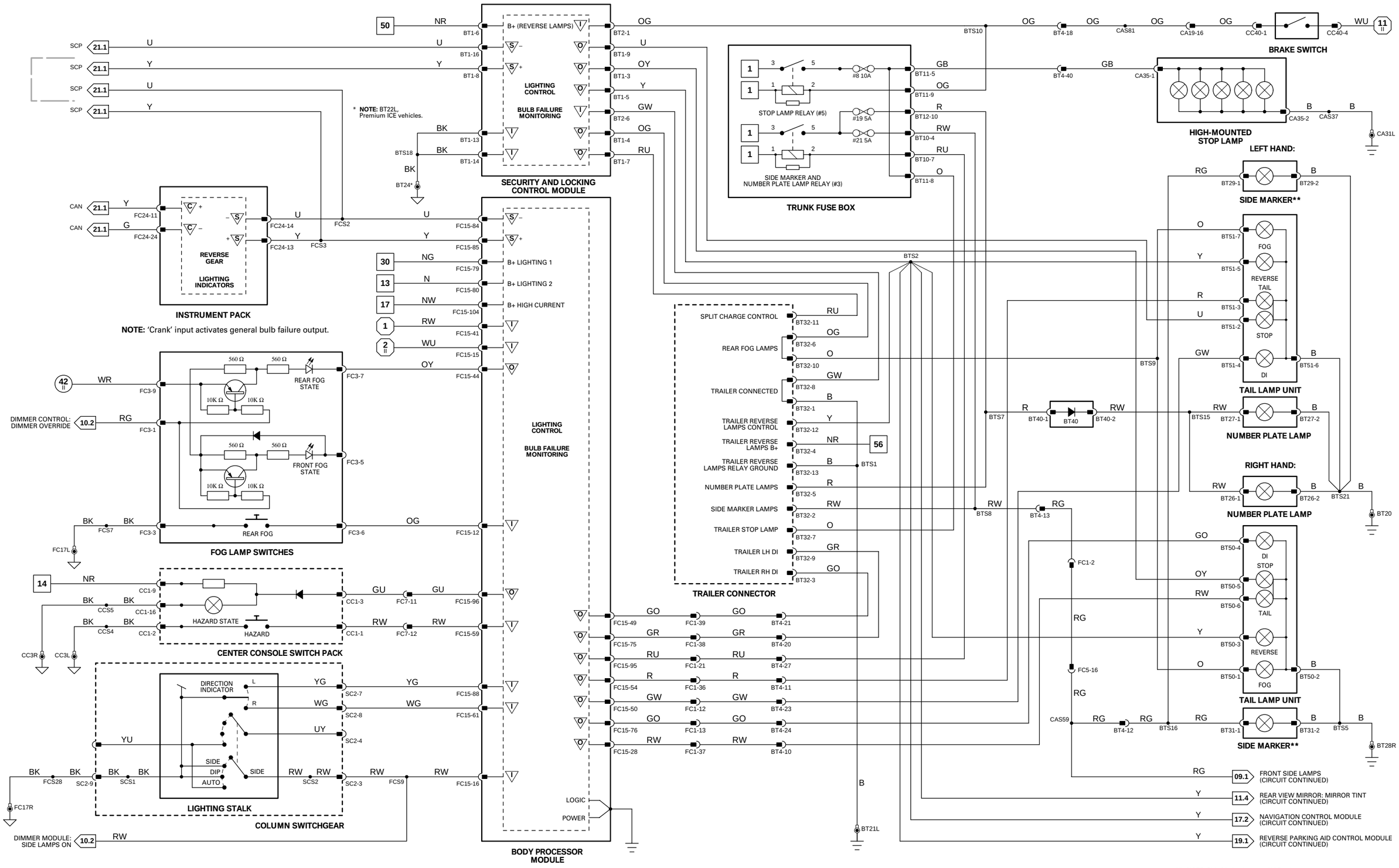

** NOTE: Side Marker Lamps – NAS only.

1 → 6 Fig. 01.1 | 1 II → 4 E Fig. 01.1 | 7 → 49 Fig. 01.2 | 50 → 88 Fig. 01.3 | 5 II → 49 II Fig. 01.4 | 50 E → 63 E Fig. 01.5 | 1 → 19 I Fig. 02.1

Input | Output | Sensor Supply V | Sensor Ground | ACP | CAN | SCP | Serial and Encoded Data

VARIANT: All Vehicles
VIN RANGE: F20645 →
DATE OF ISSUE: September 2000