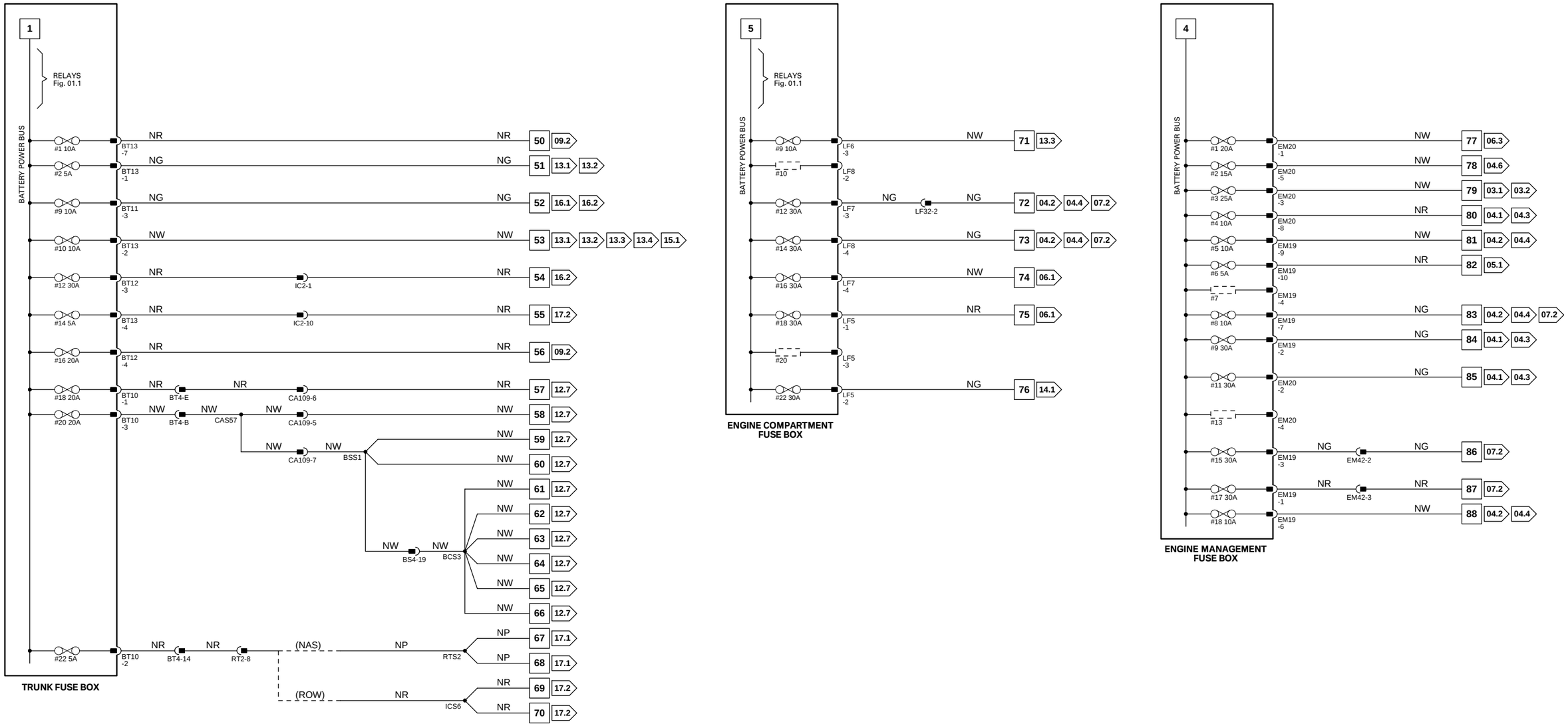
1
RELAYS
Fig. 01.1
BATTERY POWER BUS
#1 10A
BT13 -7
NR
50
09.2
#2 5A
BT13 -1
NG
51
13.1
13.2
#9 10A
BT11 -3
NG
52
16.1
16.2
#10 10A
BT13 -2
NW
53
13.1
13.2
13.3
13.4
15.1
#12 30A
BT12 -3
IC2-1
54
16.2
#14 5A
BT13 -4
IC2-10
55
17.2
#16 20A
BT12 -4
56
09.2
#18 20A
BT10 -1
BT4-E
CA109-6
57
12.7
#20 20A
BT10 -3
BT4-B
CAS57
CA109-5
58
12.7
CA109-7
BSS1
59
12.7
60
12.7
61
12.7
62
12.7
63
12.7
64
12.7
65
12.7
66
12.7
BS4-19
BCS3
#22 5A
BT10 -2
BT4-14
RT2-8
(NAS)
NP
RTS2
67
17.1
68
17.1
(ROW)
ICS6
69
17.2
70
17.2
TRUNK FUSE BOX
5
RELAYS
Fig. 01.1
BATTERY POWER BUS
#9 10A
LF6 -3
NW
71
13.3
#10
LF8 -2
#12 30A
LF7 -3
LF32-2
72
04.2
04.4
07.2
#14 30A
LF8 -4
73
04.2
04.4
07.2
#16 30A
LF7 -4
74
06.1
#18 30A
LF5 -1
75
06.1
#20
LF5 -3
#22 30A
LF5 -2
76
14.1
ENGINE COMPARTMENT FUSE BOX
4
BATTERY POWER BUS
#1 20A
EM20 -1
77
06.3
#2 15A
EM20 -5
78
04.6
#3 25A
EM20 -3
79
03.1
03.2
#4 10A
EM20 -8
80
04.1
04.3
#5 10A
EM19 -9
81
04.2
04.4
#6 5A
EM19 -10
82
05.1
#7
EM19 -4
#8 10A
EM19 -7
83
04.2
04.4
07.2
#9 30A
EM19 -2
84
04.1
04.3
#11 30A
EM20 -2
85
04.1
04.3
#13
EM20 -4
#15 30A
EM19 -3
EM42-2
86
07.2
#17 30A
EM19 -1
EM42-3
87
07.2
#18 10A
EM19 -6
88
04.2
04.4
ENGINE MANAGEMENT FUSE BOX