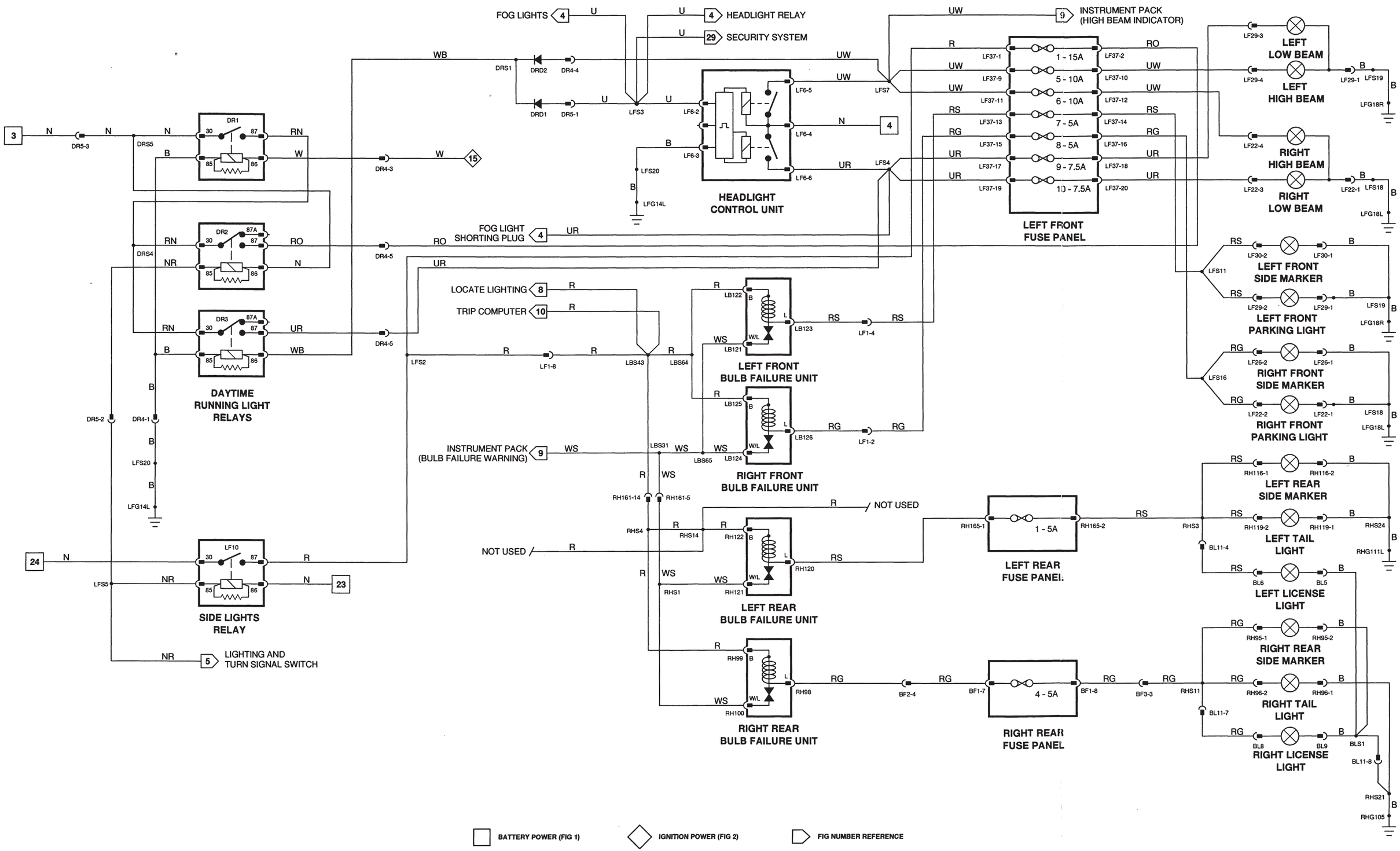
FOG LIGHTS 4
HEADLIGHT RELAY 4
SECURITY SYSTEM 29
INSTRUMENT PACK (HIGH BEAM INDICATOR) 9
HEADLIGHT CONTROL UNIT
LEFT FRONT FUSE PANEL
1 - 15A
5 - 10A
6 - 10A
7 - 5A
8 - 5A
9 - 7.5A
10 - 7.5A
LEFT LOW BEAM
LEFT HIGH BEAM
RIGHT HIGH BEAM
RIGHT LOW BEAM
DAYTIME RUNNING LIGHT RELAYS
FOG LIGHT SHORTING PLUG 4
LOCATE LIGHTING 8
TRIP COMPUTER 10
LEFT FRONT SIDE MARKER
LEFT FRONT PARKING LIGHT
RIGHT FRONT SIDE MARKER
RIGHT FRONT PARKING LIGHT
LEFT FRONT BULB FAILURE UNIT
RIGHT FRONT BULB FAILURE UNIT
INSTRUMENT PACK (BULB FAILURE WARNING) 9
NOT USED
LEFT REAR SIDE MARKER
LEFT TAIL LIGHT
LEFT LICENSE LIGHT
RIGHT REAR SIDE MARKER
RIGHT TAIL LIGHT
RIGHT LICENSE LIGHT
LEFT REAR BULB FAILURE UNIT
RIGHT REAR BULB FAILURE UNIT
LEFT REAR FUSE PANEL
RIGHT REAR FUSE PANEL
1 - 5A
4 - 5A
SIDE LIGHTS RELAY
LIGHTING AND TURN SIGNAL SWITCH
BATTERY POWER (FIG 1)
IGNITION POWER (FIG 2)
FIG NUMBER REFERENCE