DO NOT SCALE IF IN DOUBT ASK

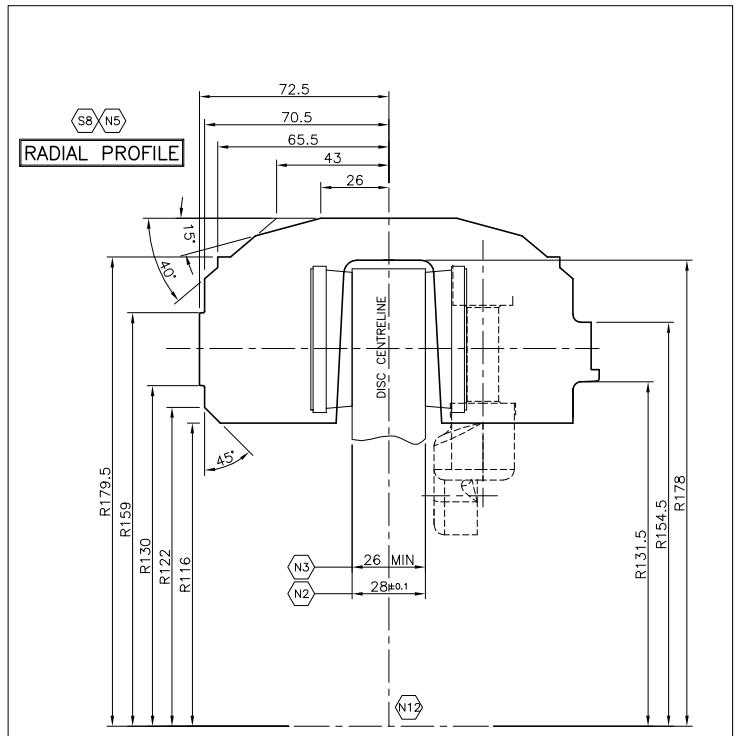

INSTALLATION REFERENCE DETAILS

	ALCON PART No.	JAGUAR PART No.	HAND	REMARKS
S1	CAR9856B24HRRL	7W8M–2K327–AA	RIGHT	AS SHOWN
S2	CAR9856B24HRLL	7W8M–2K328–AA	LEFT	SEE NOTE S2

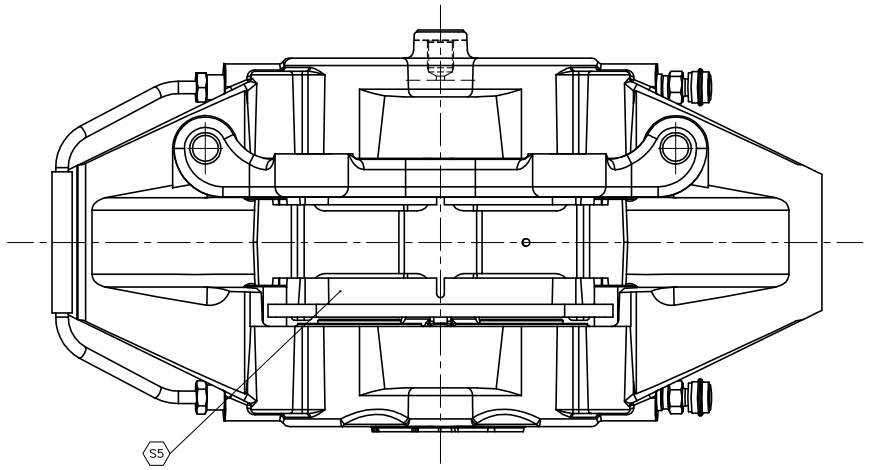

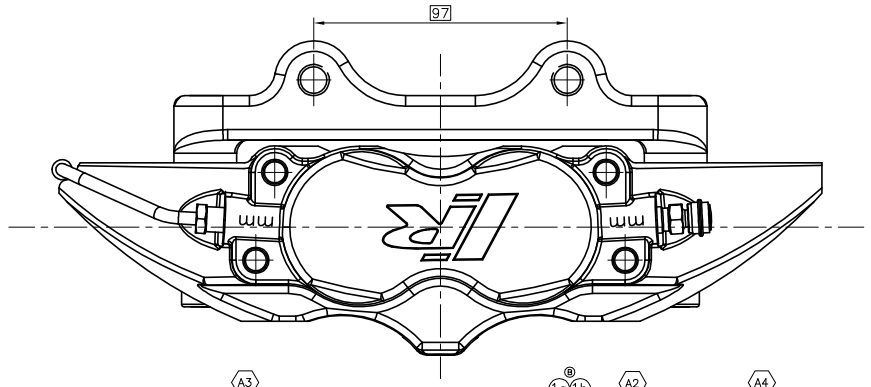

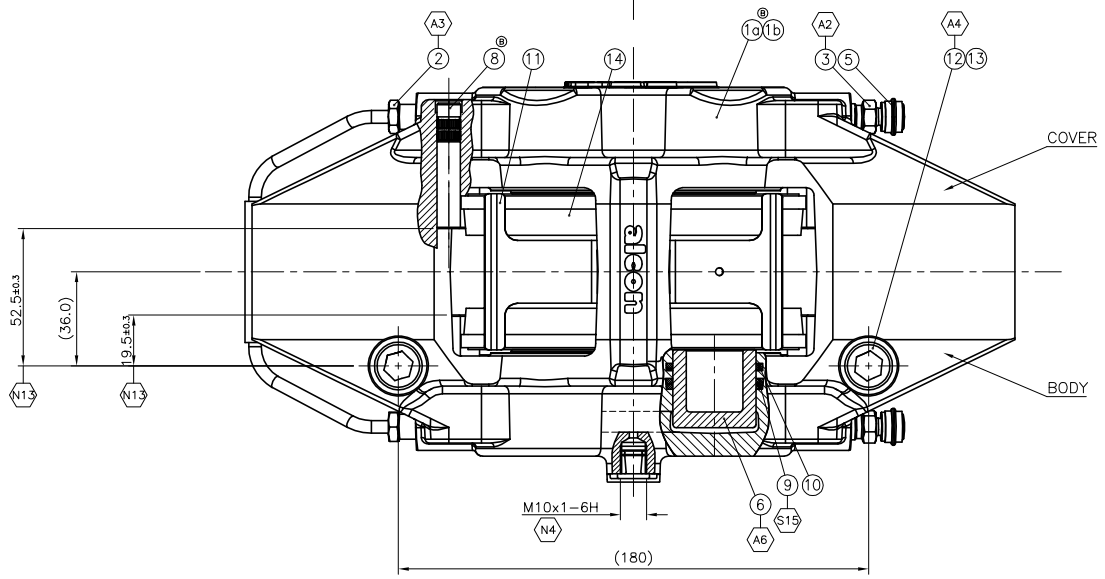

ITEM	ALCON PART No.	DESCRIPTION	QTY
1a	CAR9856B146R	REAR CALIPER HOUSING R/H (AS SHOWN)	1
1b	CAR9856B146L	REAR CALIPER HOUSING L/H	1
2	PSC4498X680	PIPE ASSEMBLY	1
3	03.3518–0066.1	BLEED NIPPLE M10x1.0	2
4	MPD0080X186	DISPOSABLE DUST CAP	1
5	MRD0080X110	BLEED NIPPLE DUST CAP	2
6	PSS3230X550	PISTON ø31.8	4
7	BIC4498X669	BRACKET	1
8	PSC4498X541	PAD ABUTMENT PIN	8
9	SES3200X900	PRESSURE SEAL ø31.8	4
10	SNW3432X603	WIPER SEAL ø31.8	4
11	SSA4498X521	ANTI–RATTLE CLIP	1
12	BSS0080X705	SOCKET HEAD CAP SCREW M12x1.75x60	2
13	WSF0080X692	WASHER ø22xø13x2.5	2
14	PNF4498X821S	BRAKE PAD ASSEMBLY 15.8mm	2

SERVICE PARTS

ALCON PART No.	JAGUAR PART No.	DESCRIPTION
CAR9856B25HRRL	7W8M–2K327–BA	R/H CALIPER ASSEMBLY (LESS PADS)
CAR9856B25HRLL	7W8M–2K328–BA	L/H CALIPER ASSEMBLY (LESS PADS)
PNF4498X821S.4	7W8M–2M008–AA	REAR PAD SET (AXLE SET)
SSA4498X521	6W9M–2L527–BA	ANTI–RATTLE CLIP
03.3518–0066.1	6W9M–2C563–AA	BLEED SCREW

NOTES

	S	SPECIFICATION
	S1	RIGHT HAND LEADING CALIPER AS SHOWN
B	S2	LEFT HAND LEADING CALIPER SYMMETRICALLY OPPOSITE APART FROM THE LOGO, WHICH IS ROTATED.
	S3	CALIPER PRODUCT SPECIFICATION CS102
B	S4	CALIPER WEIGHT 4.9Kg WITH BRACKET & PADS
B	S5	FRICTION MATERIAL FERODO DS PERFORMANCE. NOMINAL SURFACE AREA 62.7cm^2 COLOUR BLACK
	S6	CLEARANCE BETWEEN PAD AND ABUTMENT PINS
	S7	USE ONLY DOT 4 BRAKE FLUID
	S8	NOMINAL DIMENSIONS
	S9	SHIM THICKNESS
	S10	EFFECTIVE RADIUS
	S11	CORROSOIN RESISTANCE TO JMS 10.04.02
	S12	COMPLIANT WITH WSS–M99P9999–A1
	S13	FREE FROM RESTRICTED MATERIALS
B	S14	MUST CONFORM TO JAGUAR ENGINEERING SPECIFICATION 7W8M–2B118–AA
B	S15	CALIPER PRESSURE SEAL GROOVES TO ALCON SPECIFICATION SM050 BODY SIDE OF CALIPER & SM096 COVER SIDE OF CALIPER
	A	**ASSEMBLY**
B	A1	CALIPER ASSEMBLY & TEST SPECIFICATION RC2249
	A2	TORQUE 16–18Nm
	A3	TORQUE 25–28Nm
	A4	TORQUE 101–115Nm
	A5	DISPOSABLE DUST CAP
	A6	LUBRICATION ON PISTON
	A7	CALIPER ASSEMBLY PART No.
	A8	ASSEMBLY DATE IDENTIFICATION (WEEK/YEAR)
	A9	SURFACES TO BE FREE FROM PAINT
	N	**INSTALLATION**
	N1	CALIPER MOUNTING FACE
	N2	NEW DISC THICKNESS
	N3	WORN DISC THICKNESS
	N4	HOSE CONNECTION TORQUE 19–22Nm
	N5	NOMINAL RADIAL PROFILE OF CALIPER ON ø350 DISC
	N6	NEW PAD THICKNESS
	N7	POSITION OF NEW PADS WHEN SUPPLIED
	N8	THICKNESS OF FULLY WORN PADS
	N9	FLUID VOLUME REQUIRED FOR FULL WEAR OF PADS AND DISC – 30cm^3 MIN
	N10	DISC DIMENSIONS
	N11	DIRECTION OF DISC ROTATION
	N12	DISC AXIS
	N13	PAD ABUTMENT PIN GAP
	F	**FINISHING**
B	F1	PAINT EXTERNAL SURFACES IN ACCORDANCE WITH RC2247 – COLOUR RAL3003 (RUBY RED) JAGUAR COLOUR REFERENCE JSC262
B	F2	'R' LOGO LINISHED AFTER PAINTING CLEAR LACQUER TOP COAT TO RC2247

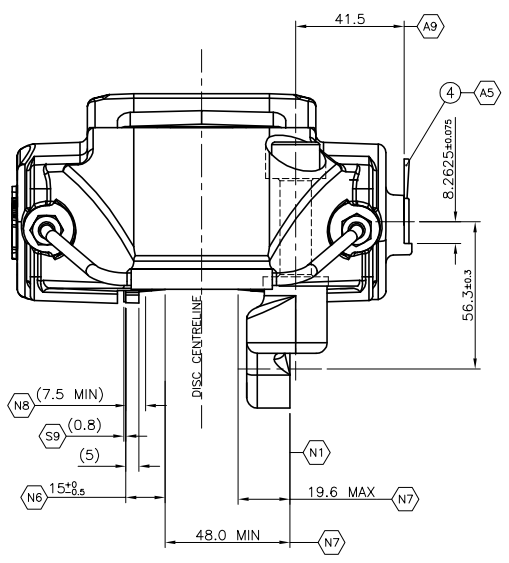

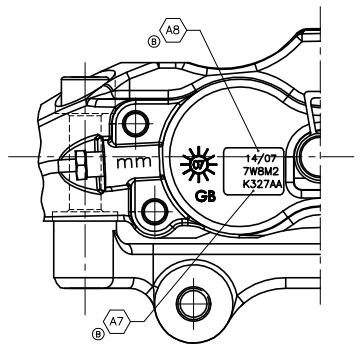

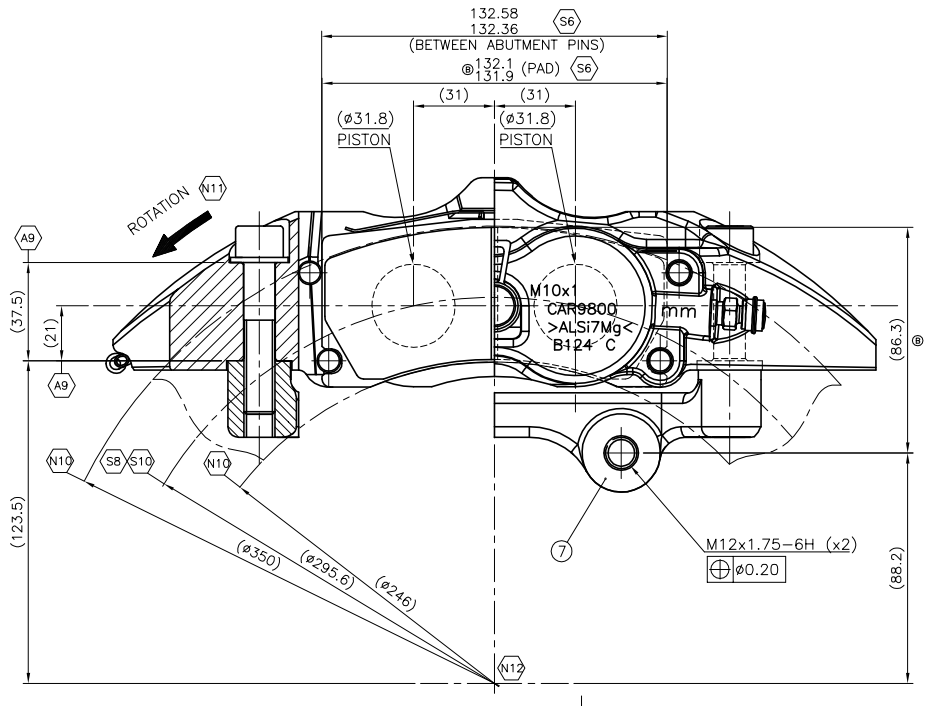

A1 F1 F2 N9 S3 S7

CHANGES AT THIS ISSUE DENOTED B

SS	LOC.	CHANGE				
B		ITEM 8 PRESSED STYLE PAD ABUTMENT PIN DETAIL INTRODUCED, 131.9/132.1 PAD DIM WAS 131.74/131.9, ASSEMBLY PART No. & DATE CODE MOVED FROM CALIPER UNDERSIDE TO INBOARD FACE, S4 CALIPER WEIGHT 4.9Kg ADDED, FRICTION MATERIAL AREA 62.7cm^2 WAS 61.0cm^2, NOTES S14, S15 ADDED, RC2247 IN NOTES F1 & F2 WAS RC2192, 86.3 DIM WAS 86.6, CALIPER HOUSING NOW HAS HANDED PART NUMBERS, L/H CALIPER IN NOTE S2 WAS SYMMETRICALLY OPPOSITE. RC2249 IN NOTE A1 WAS RC2013. NOTE S13 REMOVED (RESISTANCE TO FLUIDS) COVERED BY NOTE S14.	P. WATTS 05.09.07	G. COLEMAN 05.09.07		A. SMITH 05.09.07
A		FIRST ISSUE	G. COLEMAN 17.07.06	P. WATTS 31.07.06		
			DRN DATE	CHK DATE	MGR DATE	DIR DATE

S4

3D MODEL: YES ☒ NO ☐
QA:
WEIGHT 4900 g

REMOVE ALL SHARP EDGES, BURRS AND SWARF

Ra Ra

ALL DIMENSIONS ARE BEFORE TREATMENT UNLESS STATED

TOLERANCES UNLESS STATED BLD ANGLES ±0.5°

SCALE 1:1

MATERIAL

HEAT TREATM/CURE CYCLE

SURFACE TREATMENT

DRAWN BY G COLEMAN DATE 17.07.06

CHECKED BY P WATTS DATE 31.07.06

MATERIAL CHECKED BY DATE

APPROVED BY A SMITH DATE 03.05.07

ALCON COMPONENTS LIMITED
APOLLO
TAMWORTH
STAFFORDSHIRE B79 7TN
TEL: +44(0)1827 722700

alcon

NOTE: THIS DRAWING AND INFORMATION THEREUPON IS THE PROPERTY OF ALCON COMPONENTS LIMITED IT IS LENT ON THE UNDERSTANDING THAT IT IS NOT TO BE COPIED, USED OR DISCLOSED TO ANY UNAUTHORISED PERSON WITHOUT WRITTEN CONSENT OF ALCON AND SHALL BE RETURNED TO ALCON COMPONENTS LIMITED.

PART NAME ONLY, 40 digits/spc
MONOBLOC CALIPER INSTALLATION JAGUAR X150R (REAR)

PART NUMBER CAR98126

DRAWING ISSUE / MANUF CODE

SHEET 1 FROM 1