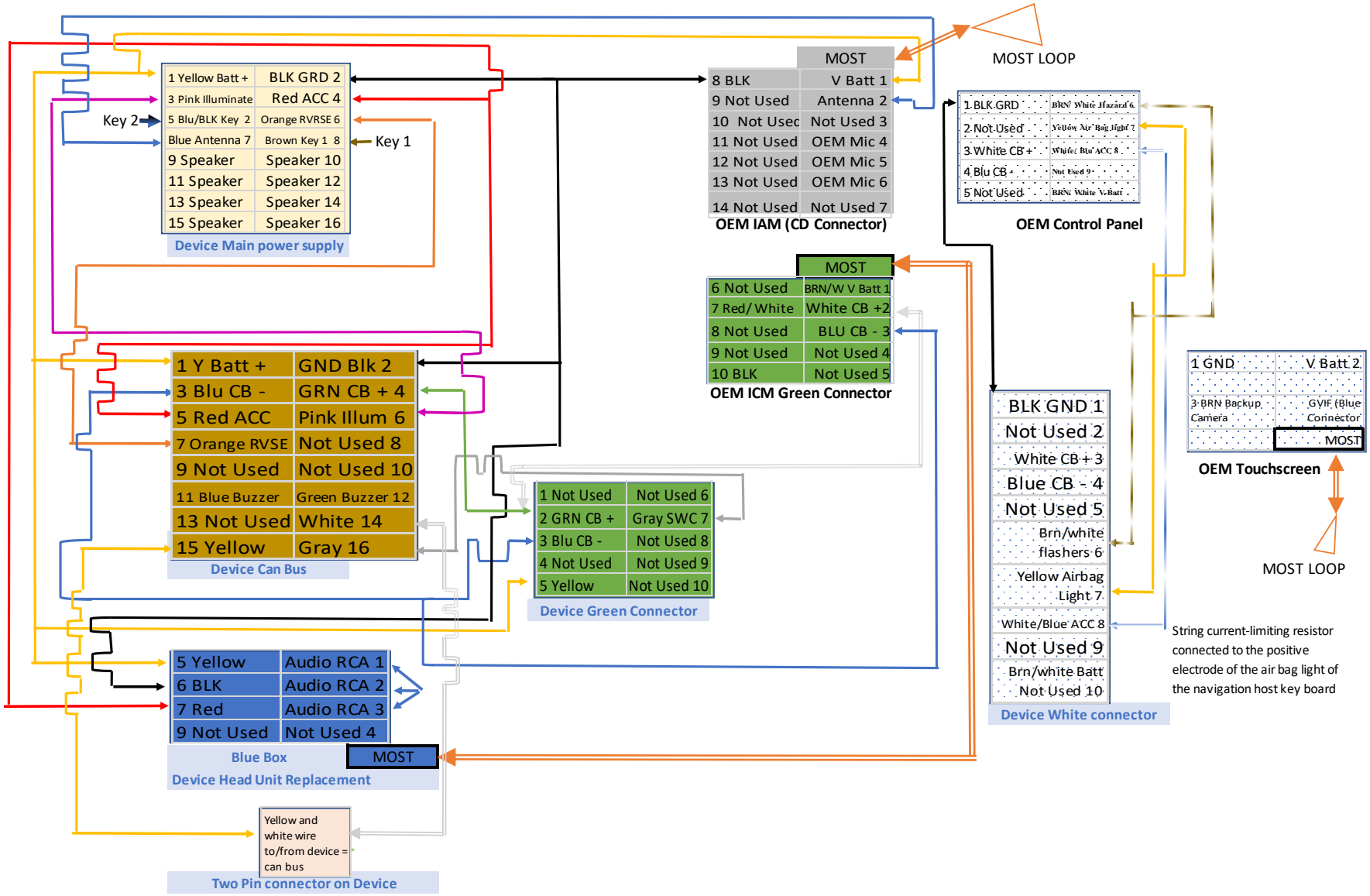
1 Yellow Batt +
BLK GRD 2
3 Pink Illuminate
Red ACC 4
5 Blu/BLK Key 2
Orange RVRSE 6
Blue Antenna 7
Brown Key 1 8
9 Speaker
Speaker 10
11 Speaker
Speaker 12
13 Speaker
Speaker 14
15 Speaker
Speaker 16
Key 2
Key 1
Device Main power supply
MOST
8 BLK
V Batt 1
9 Not Used
Antenna 2
10 Not Used
Not Used 3
11 Not Used
OEM Mic 4
12 Not Used
OEM Mic 5
13 Not Used
OEM Mic 6
14 Not Used
Not Used 7
OEM IAM (CD Connector)
MOST LOOP
1 BLK GRD
BRN/ White Hazard 6
2 Not Used
Yellow Air Bag light 7
3 White CB +
White/ Blu ACC 8
4 Blu CB -
Not Used 9
5 Not Used
BRN/ White V-Batt
OEM Control Panel
MOST
6 Not Used
BRN/W V Batt 1
7 Red/ White
White CB +2
8 Not Used
BLU CB - 3
9 Not Used
Not Used 4
10 BLK
Not Used 5
OEM ICM Green Connector
1 Y Batt +
GND Blk 2
3 Blu CB -
GRN CB + 4
5 Red ACC
Pink Illum 6
7 Orange RVSE
Not Used 8
9 Not Used
Not Used 10
11 Blue Buzzer
Green Buzzer 12
13 Not Used
White 14
15 Yellow
Gray 16
Device Can Bus
1 Not Used
Not Used 6
2 GRN CB +
Gray SWC 7
3 Blu CB -
Not Used 8
4 Not Used
Not Used 9
5 Yellow
Not Used 10
Device Green Connector
BLK GND 1
Not Used 2
White CB + 3
Blue CB - 4
Not Used 5
Brn/white flashers 6
Yellow Airbag Light 7
White/Blue ACC 8
Not Used 9
Brn/white Batt
Not Used 10
Device White connector
1 GND
V Batt 2
3 BRN Backup Camera
GVIF (Blue Connector
MOST
OEM Touchscreen
MOST LOOP
String current-limiting resistor connected to the positive electrode of the air bag light of the navigation host key board
5 Yellow
Audio RCA 1
6 BLK
Audio RCA 2
7 Red
Audio RCA 3
9 Not Used
Not Used 4
Blue Box
MOST
Device Head Unit Replacement
Yellow and white wire to/from device = can bus
Two Pin connector on Device