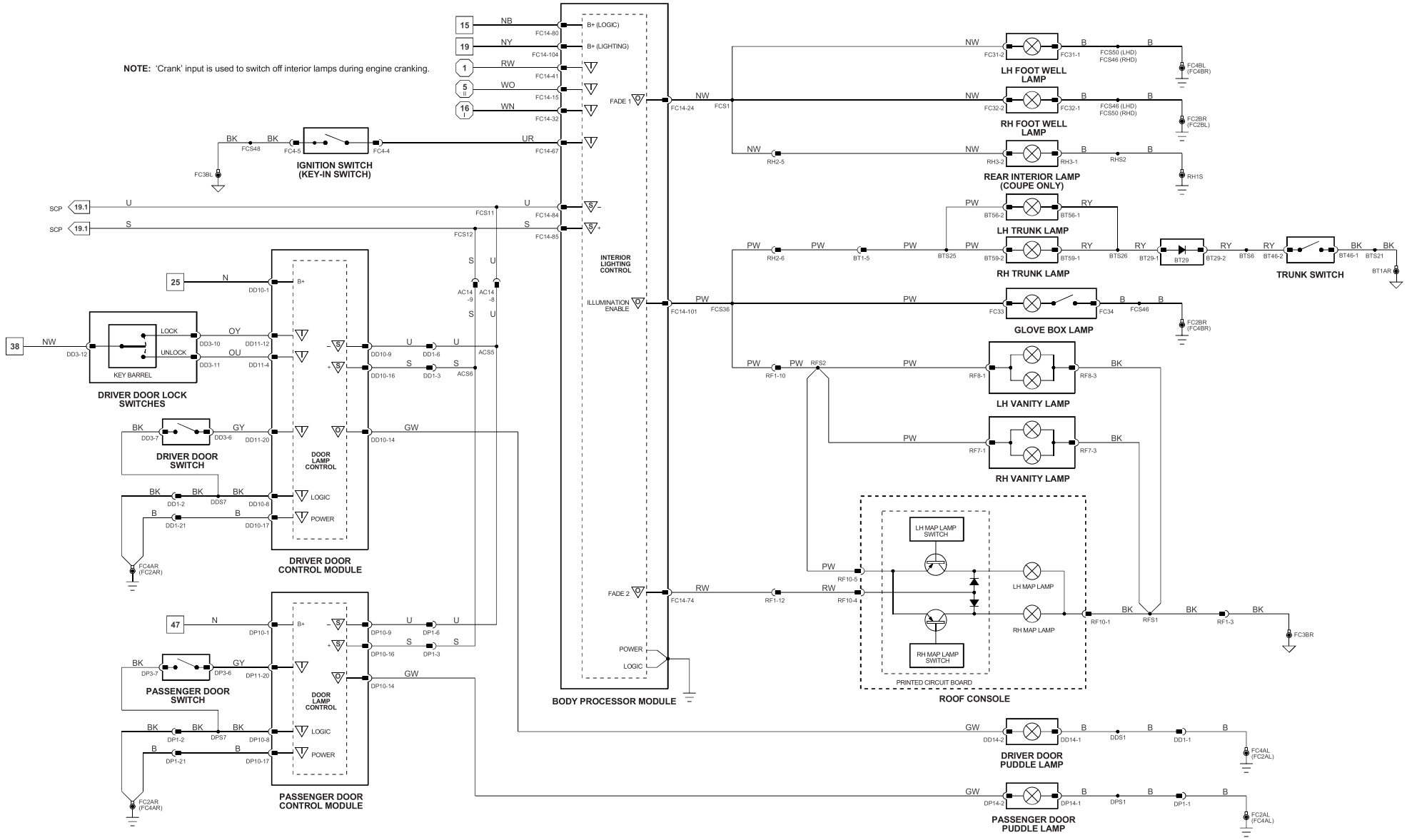

1 – 6, 1 – 5 Fig. 01.1	7 – 51 Fig. 01.2	6 – 38 Fig. 01.4	1 – 18 Fig. 02.1	Input	Output	Serial and Encoded Communications
	52 – 81 Fig. 01.3	39 – 55 Fig. 01.5		Signal Ground (SG)	CAN (Network)	SCP Network

VARIANT: All Vehicles
VIN RANGE: 018108 →
DATE OF ISSUE: SEPTEMBER 1997